MBA 340 ... 359-E ...

(D) Betriebsanleitung für Motorregelventile baelz 340... 359-E...
(GB) Operating instructions for motor control valves baelz 340... 359-E...
(F) Mode d'emploi pour les vannes de régulation commandées par moteur baelz 340...359-E...
(I) Istruzioni d'uso per valvole di regolazione motorizzate baelz 340... 359-E...
(NL) elektromotorisch gestuurde afsluiters baelz 340... 359-E...
(P) Instruções de serviço para válvulas de regulação de motores baelz 340... 359-E...
(E) Instrucciones de servicio para válvulas reguladoras motorizadas baelz 340 ... 359-E ...
(S) Bruksanvisning för motorreglerventiler baelz 340... 359-E...

Fig./Tek 1: S21

Fig./Tek 2: S21

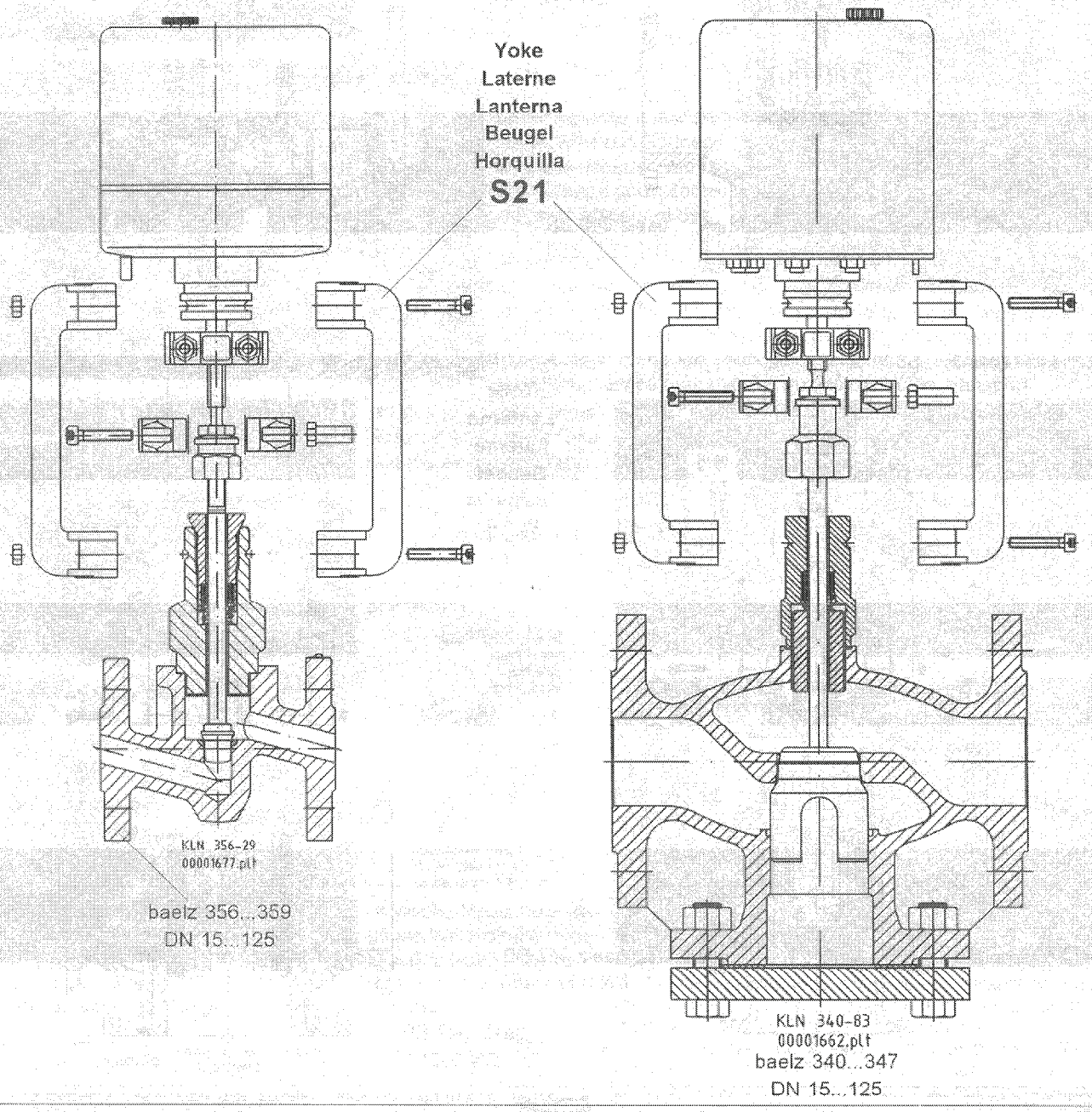

baelz automatic

MBA 340 ... 359-E ...

Fig./Tek. 3: S31

Fig./Tek. 4: S31

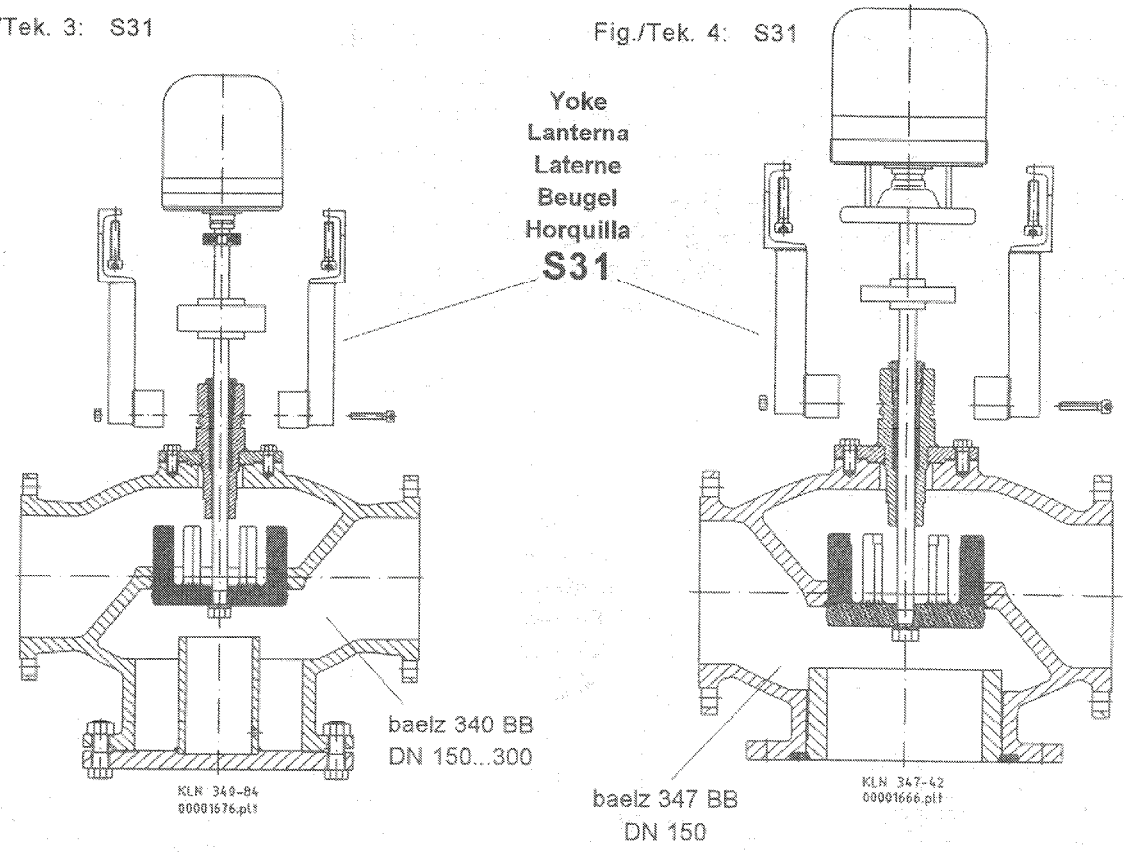

Fig./Tek. 5: S31

Fig./Tek. 6: S31

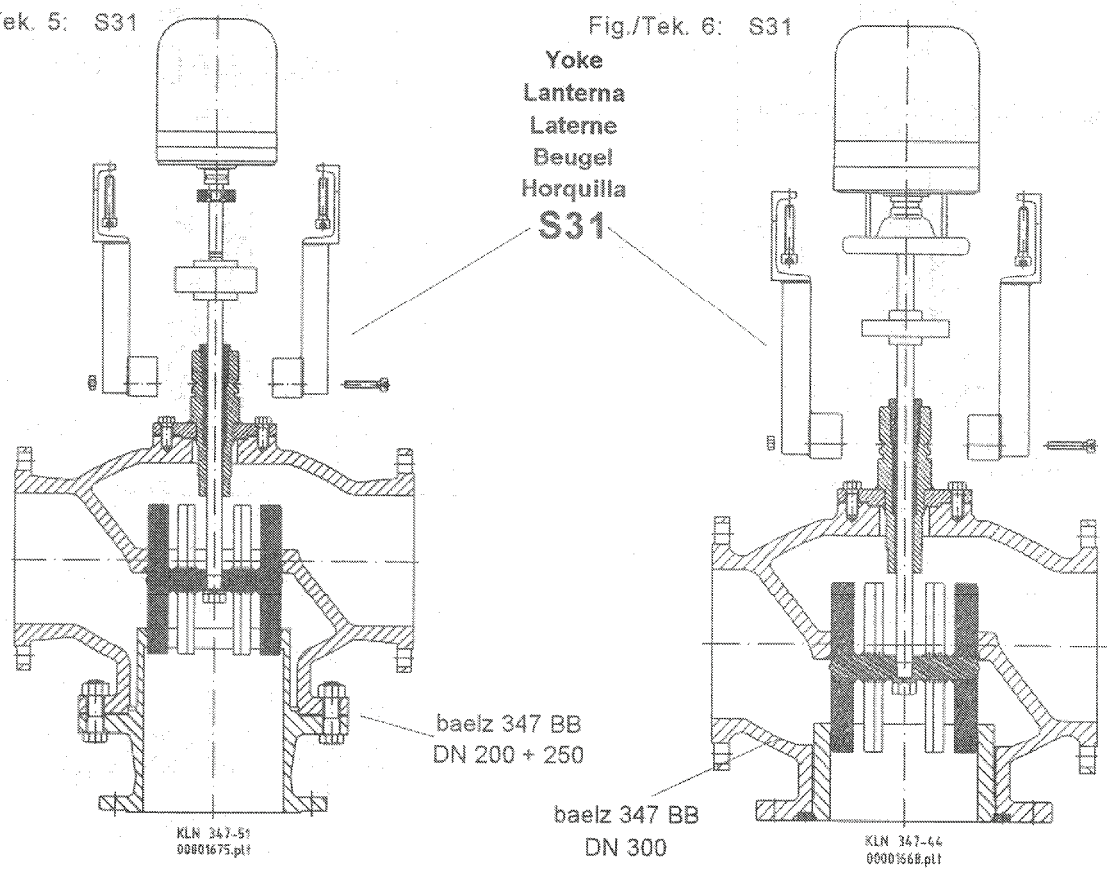

W. Bälz & Sohn GmbH & Co., Koepffstr. 5, D-74076 Heilbronn, Telefon 07131-1500-0, Fax 07131-1500-21

MBA 340 ... 359-E ...

GB

Contents

1. Safety notes

General

These installation and operating instructions contain basic information which must be observed on installing, operation and maintenance. They must therefore be read by the fitter as well as the responsible technical personnel/ operator without fail before installation and start-up. They must be constantly available at the location of the plant. These installation and operating instructions refer to motor driven control valves.

Not only the general safety notes listed under this "Safety notes" section but also the notes inserted under the other sections have to be observed.

Caution:

The safety notes contained in these installation and operating instructions which can cause danger for persons when not observed, are specially identified with the general hazard symbol "Safety symbol according to DIN 4844-W9".

Indications directly attached to the system, such as

- Direction arrow
- Identification for fluid connections

must be observed without fail and kept in a completely legible condition.

Personnel qualification and training

The personnel for operation, maintenance, inspection and installation must have the corresponding qualification for this work. Responsibility and supervision of the personnel must be regulated accurately by the operator.

Danger on non-observance of the safety notes

Non-observance of the safety notes can result in both danger for persons and also for the environment and plant. Non-observance of the safety notes can lead to the loss of any claims for compensation.

In detail, non-observance can result in the following hazards, for instance:

- Failure of important functions of the plant
- Failure of specified methods for maintenance and repair
- Endangering persons by electrical and mechanical effects

Safety-conscious working

The safety notes listed in these installation and operating instructions, the existing national regulations for accident prevention as well as possible internal working, operating and safety regulations of the operator shall be complied with.

Safety notes for the operator / user

An existing guard for moving parts must not be removed when the plant is in operation.

Hazards due to electrical energy shall be excluded (for details please refer to the regulations of the VDE and of the local power supply utility, for instance).

Safety notes for maintenance, inspection and installation work

The operator shall ensure that all maintenance, inspection and installation work is performed by authorized and qualified skilled personnel, which has informed itself sufficiently by detailed study of the installation and operating instructions.

Basically work on valves and their drives shall be performed only at standstill. The procedure for shutting down the plant described in the installation and operating instructions must be complied with without fail.
Immediately after completion of the work, all safety and protective devices must be attached again or put into operation.

Unauthorized conversion and spare parts manufacture

Conversions or alterations to valves and their drives are permitted only after consultation with the manufacturer. Original spare parts and accessories authorized by the manufacturer serve to promote safety. The use of other parts can nullify the liability for the resulting consequences.

Inadmissible operating modes

Operating safety of the delivered valves is guaranteed only when they are used as directed. The limiting values stated in the technical data must not be exceeded under any circumstances.

2. Condition on delivery

Delivery is made as a complete unit, i.e. actuator, yoke and valve are one unit.

baelz 373E...	Type
Ty... mm/min	Stroke
V	Voltage
Hz	Frequency
2EZ	2 additional limit switches
FG 5 kOhm	Potentiometer
FG 200 Ohm	Potentiometer
1020 Servo amplifier see Item 8.1	
only for safety actuator balz 373 E11	
baelz 373 E 11 Z - pulling on power failure	
baelz 373 E 11 D - pushing on power failure	
DINReg No. according to DIN 32730 only in connection with the valve.	

4. Installation

To prevent damage to the valve seats in transport and storage, the valves are delivered in a closed condition. Remove caps on the flange openings before installation. The gaskets must be well centered on the connection flanges on installation.
The pipeline must be run so that damaging thrust and bending forces are kept away from the valve housings. When the pipeline is painted, gland screws, spindles and plastic parts must not be painted. If building work is still taking place, cover the valves to protect them against dust, sand or building material pieces (e.g. with plastic wrapping).
Pipelines must be flushed previously. Basically, a strainer trap must be connected ahead of control valves (Fig. 9 and 10).

4.1 Installation direction

The inflow side is clearly marked on the name plate (Fig. 13-16, page 27).

4.2 Conditions of use

a... Tmax 240°C (Fig. 11)
Pmax... "PN"-BA Item 3 + DIN 2401
b... Tmax 350°C (Fig. 12)
Pmax... "PN"-BA Item 3 + DIN 2401
c... 0...50°C/0-75% r. F. (Fig. 11+12)
observe IP... DIN 40050

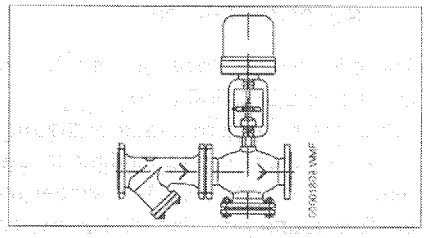

Fig./Tek. 9:

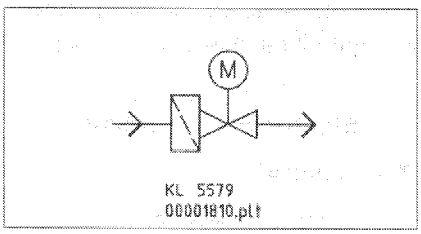

Fig./Tek. 10:

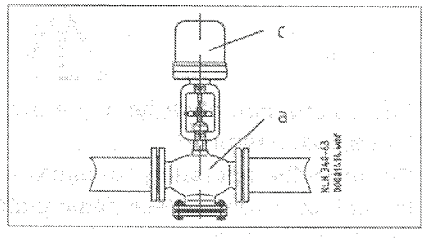

Fig./Tek. 11:

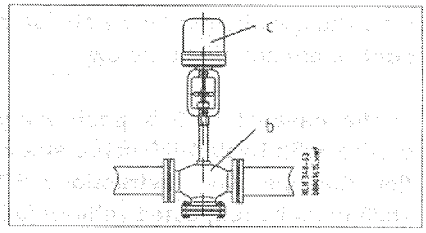

Fig./Tek. 12:

3. Identification of valve and drive

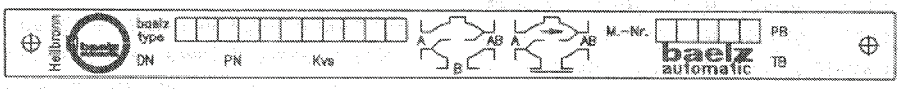

Fig./Tek. 7: Valve

KLN 340-70
00001427.plt

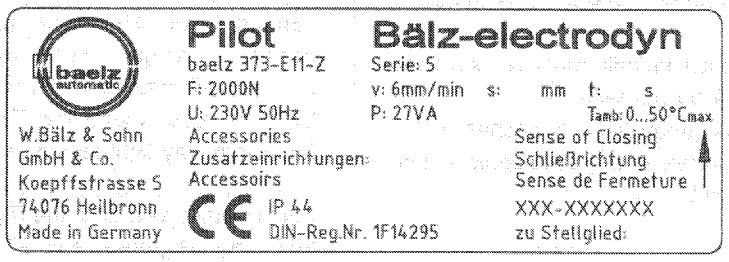

KLN 373-E11-12 00002595.wmf

Fig./Tek. 8: Actuator

MBA 340 ... 359-E ... GB

4.3 Permissible installation position

Fig. 17-24 Page 27

4.4 Insulation

Fig. 25/26 Page 28

5. Manual intervention in the electrical drive

Fig. 27/28 Page 28

Caution:

The baelz 373 E11 safety drive can be operated only electrically.

6. Force-dependent motor shutdown (except for E06)

Fig. 29-31 Page 29

There is no force-dependent shutdown in the baelz 373-E06 drive.
When the maximum torque of the motor is reached, corresponding to the maximum thrust, the shaft wheel including gearing remains stationary, an internal permanent magnet coupling in the motor enables the drive motor to continue turning.

7. Electrical connection

7.1 General

Cable cross-section:

$0{,}75^2$ Cu ≥ $1{,}5^2$ Cu

Caution:

The connection shall be made only by skilled personnel.
Compare the operating voltage with the actuator voltage (see name plate Item).

Only the connection for 3-point step control are described below.

In the case of 0-10 V positioning control with baelz 1020 servo amplifier, the operating instructions BA 1020 must be respected without fail.

Caution:

The spring is pretensioned in safety actuators 373-E11. See also item 9 last paragraph.

7.2 Electrical connection

Fig. 32-40 Page 30/31

8. Maintenance

8.1 Maintenance on the valve

The valves are maintenance-free. The spindle seal is permanently lubricated for life. Nevertheless, should a spindle seal develop leaks, it must be replaced completely and the cause eliminated (dirt, welding beads, other foreign bodies).

8.2 Maintenance on the actuator

Maintenance is restricted to an annual functional check. Here check the safety drives E11 for their function
- closing without current
or
- opening without current

Renew the lubrication of the spindle on the drive.
Lubrication is with high-performance grease paste G 805.

9. Changing the spindle seal (V packing set)

Version A or B (Fig. 41-47 Page 32) of the head piece is present according to valve type.
After dismantling the drive, the pressure screw or the head piece with V packing set can be unscrewed. Change the V packings only complete with spring (Fig. 48-63 Page 33-36).

The conical spindle must be examined carefully for damage.
If it has grooves or scratches in the packing area, change the conical spindle as well.

Caution:

The spring in safety drives 373-E11 is pretensioned. When dismantling the valve and drive, observe without fail the supplementary operating instructions 373-E11-Z (pulling), 373 E11-D (pushing).

11. Practical notes on integrating the control valves in the pipelines:

The pages **40** and **41** show the types of installation of control valves used mostly in pipelines for steam and liquids. The correct project-related installation and the permissible pressure drop at nominal amount Dpv of the control valve are determining factors for the control quality. The pictures on pages **40 + 41** are intended to help in choosing these two points correctly. If you are not clear please consult Bälz.
The following rule of thumb applies for control valves:
The pressure drop over the valve Dpv at nominal amount should be at least exactly as large as the pressure drop Dpv in the associated load or – which is better – 2 – 5 times larger.

Valve for pressure reductions and naturally designed corresponding to the required pressure drop, whereby the noise level allowed today must be taken into account primarily.
For three-way valves a distinction is made between mixing valves (pictures **66.1** to **66.4**) and changeover valves (pictures **67.1** to **67.6**).
Bälz three-way valves are designed as mixing valves. If these valves are used as changeover valves, the pressure drop may be max. 0.6 bar; please consult Baelz Heilbronn for higher pressure drops. For installation corresponding to the pictures **67.1** and **67.6** we recommend the Type baelz 347 (both way tightness Kvs 0.004%).

For all other versions the Type baelz 342 (way B tightness Kvs 2%) is by all means suitable.

MBA 340 ... 359-E ...

(D) Einbaurichtung
(GB) Installation direction

Type baelz 344...346
tipo 356...359

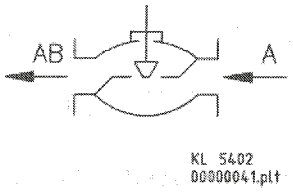

Fig.: 13:

(F) Sens de montage
(I) Direzione di montaggio

Type / tipo baelz 340

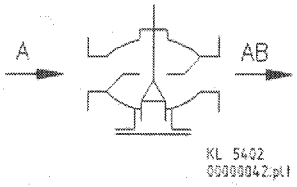

Fig. 14:

(NL) Inbouwwijze
(P) Sontido de montagem

	baelz
- Umstellventil	
- Change-over valve	342
- Vanne de Répartition	347
- Valvola deviatrice	345
- Omschakel-afsluiter	354
- Válvula repartidora	
- Válvula de diversificadora	
- Fördelningsventil	

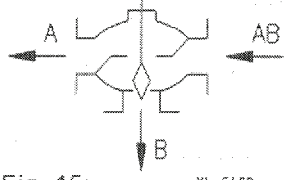

Fig. 15:

(E) Dirección del montaje
(S) Flödesriktning

	baelz
- Mischventil	
- Mixing valve	342
- Vanne de mélange	347
- Valvola miscelatrice	353
- Meng-afsluiter	354
- Válvula de mistura	
- Válvula mezcladora	
- Blandningsventil	

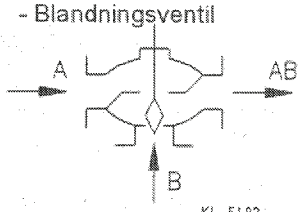

Fig. 16:

(D) **Zulässige Einbaulage**
(GB) **Permissible installation position**
(F) **Position de montage admissible**
(I) **Posizioni di montaggio ammesse**
(NL) **Toelaatbare inbouwpositie**
(P) **Posicao de montagem admitida**
(E) **Posición de montaje admisible**
(S) **Tillåtet inmonteringsläge**

Fig. 17:

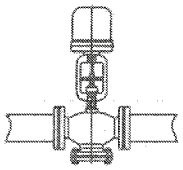

KL 5403
00000047.plt

* Fig. 18:

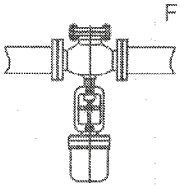

Fig. 19:

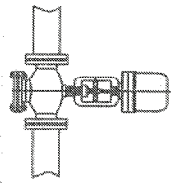

Fig. 20:

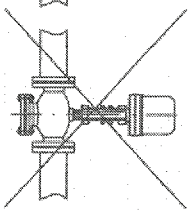

Type
K; KK; KSS

Fig. 21:

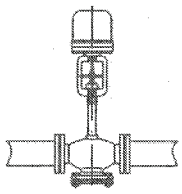

KL 5403
00000048.plt

* Fig. 22:

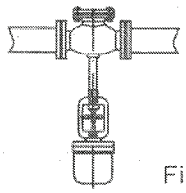

Fig. 23:

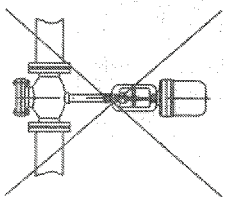

Fig. 24:

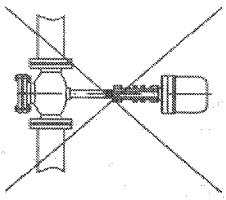

*** Fig. 18 und Fig. 22**

(D) Bei dieser Einbauart ist zu beachten, dass die Stopfbuchse regelmäßig auf Dichtigkeit geprüft werden muss.
(GB) For this valve mounting position a routine check of the valve sealing has to be quaranted.
(F) Das ce genre de montage, vérifier régulièrement l'étanchéité du presse-étoupe.
(I) Con questo tipo die montaggio, occorre regolarmente controllare se il premistoppa (guarnizione) non perde.
(NL) Bij deze inbouwwijze dient de stopbusafdichting regelmatig gecontroleerd te worden.
(P) Na montagem desta válvula há que verificar a completa estanquecidade do empanque.
(E) Si se utiliza la posicion actuador abajo verificar la estandqueidad del prensastopa.
(S) Vid detta installationssätt bör beaktas, att packboxens täthet regelbundet måstc kontrolleras.

MBA 340 ... 359-E ...

(D) Isolierung
(GB) Insulation
(F) Isolation
(I) Coibentazione

(NL) Isolatie
(P) Isolamento
(E) Aislamiento
(S) Isolering

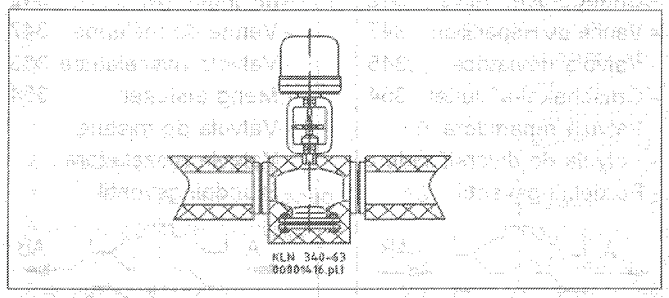

Fig. 25:

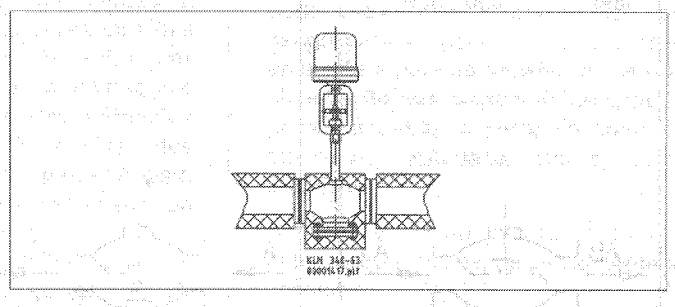

Fig. 26:

(D) Handeingriff am elektr. Antrieb
(GB) Manual intervention in the electrical drive
(F) Commande manuelle du servomoteur
(I) Intervento manuale sull'attuatore motorizzato

(NL) Handbediening bij elektrische aandrijvingen
(P) Manipulação manual do servo-motor elétrico
(E) Manipulación en el accionamiento eléctrico
(S) Handmanöver på det elektriska ställdonet

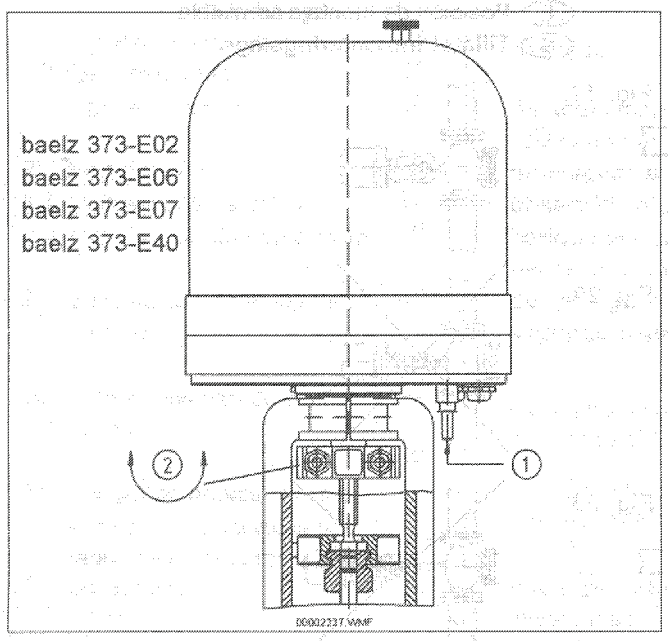

Fig. 27:

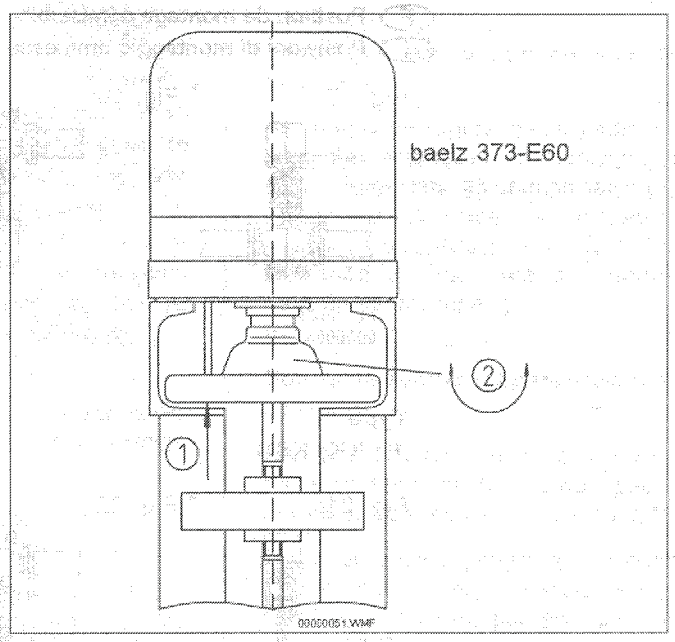

Fig. 28:

Achtung:
Der Sicherheitsantrieb baelz 373 E11 kann nur elektrisch betätigt werden.

Caution:
The baelz 373 E11 safety drive can be operated only electrically.

Attention :
Le servomoteur à retour à zéro baelz 373 E11 ne peut être actionné qu'électriquement.

Attenzione
L'attuatore con chiusura démergenza 373 E11 può essere comandato solo elettricamente.

Attentie:
De veiligheidsaandrijving baelz 373 E11 kan alleen elektrisch bediend worden.

Atenção!
O servo-motor de segurança baelz 373 E11 poderá ser acionado somente eletricamente.

Atención:
El accionamiento de seguridad balez 373 E11 puede ser accionado sólo eléctricamente.

Obs:
Säkerhetsställdonen baelz 373 E11 kan endast drivas elektriskt.

MBA 340 ... 359-E ...

(D) Kraftabhängige Motorabschaltung (außer E06)
(GB) Force-dependent motor shutdown (except for E06)
(F) Arrêt des moteurs dépendant de la force par contact fin de course (tous les modéles sauf E06)
(I) Disinserimento in funzione della forza assiale (esclusa E06)
(NL) Krachtafhankelijke uitschakeling van de motor (behalve E06)
(P) Paragem do motor em função da carga (com exceção do E06)
(E) Desactivación del motor en función de la fuerza (excepto E06)
(S) Kraftberoende motorfrånslagning (utom E06)

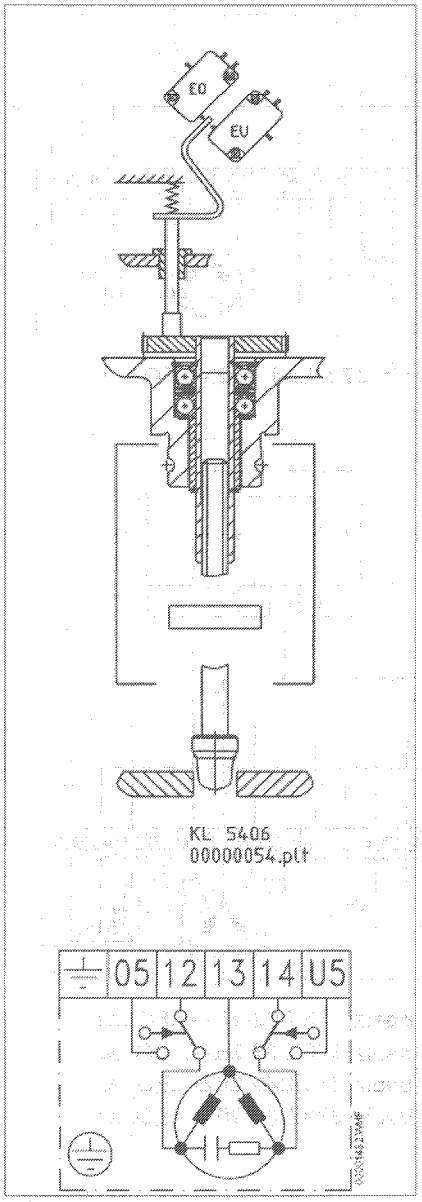

Fig. 29:

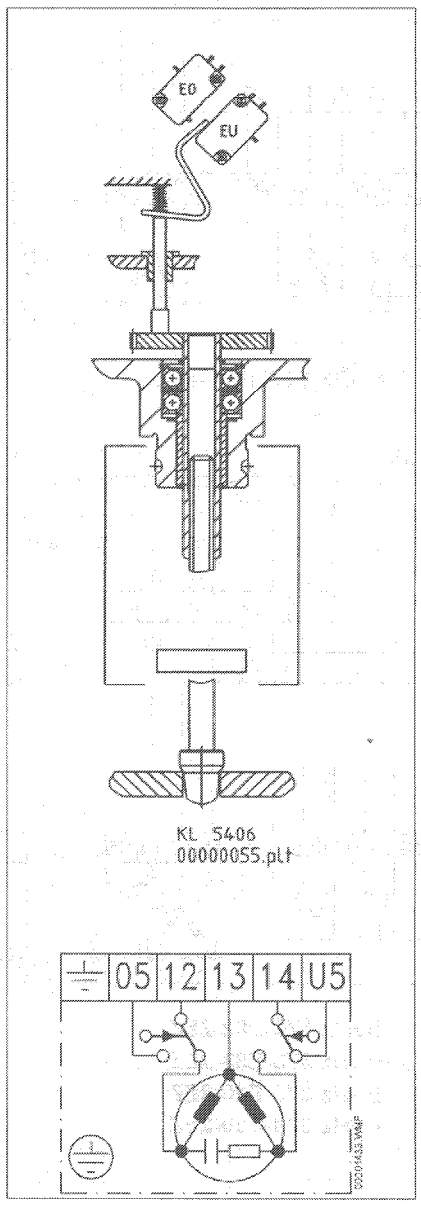

Fig. 30:

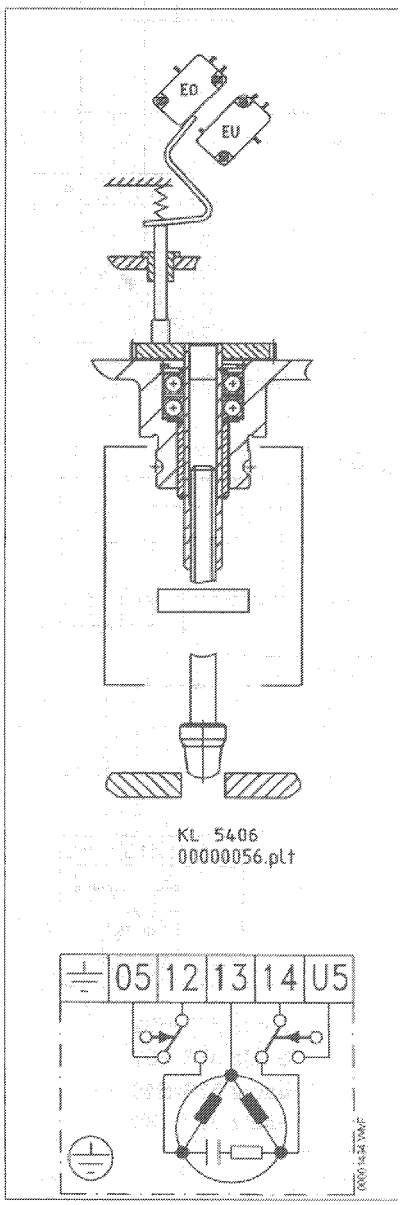

Fig. 31:

MBA 340 ... 359-E ...

(D) Elektrischer Anschluß
(GB) Electrical connection
(F) Raccordement électrique
(I) Collegamento elettrico
(NL) Elektrische aansluiting
(P) Ligação elétrica
(E) Conexión eléctrica
(S) Elansluting

Fig. 32:

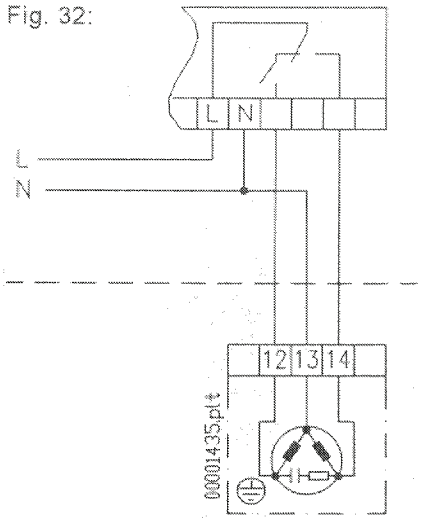

baelz 373-E06

Fig. 33:

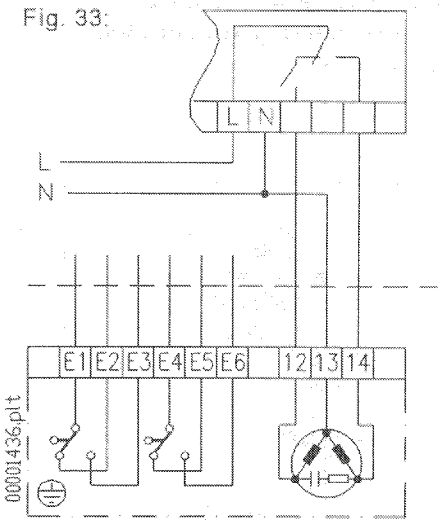

baelz 373-E06-2EZ

Fig. 34:

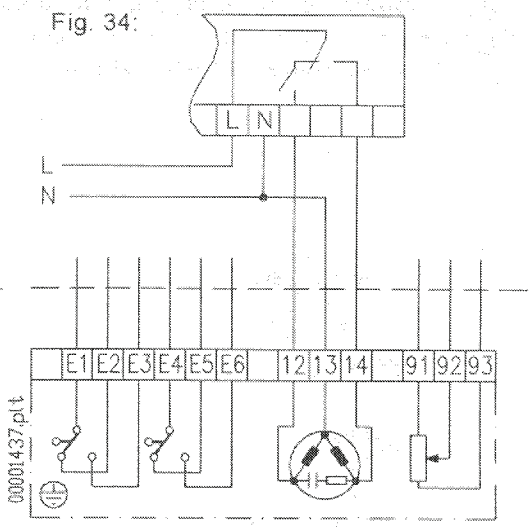

baelz 373-E06 2EZ-...FG..Ω

Fig. 35:

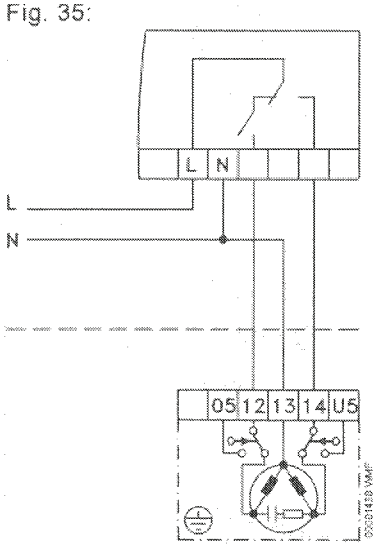

baelz 373-E02
baelz 373-E07
baelz 373-E40
baelz 373-E60

Fig. 36:

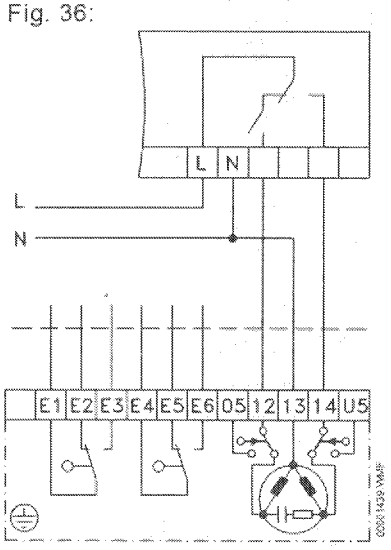

baelz 373-E02-2EZ
baelz 373-E07-2EZ
baelz 373-E40-2EZ
baelz 373-E60-2EZ

Fig. 37:

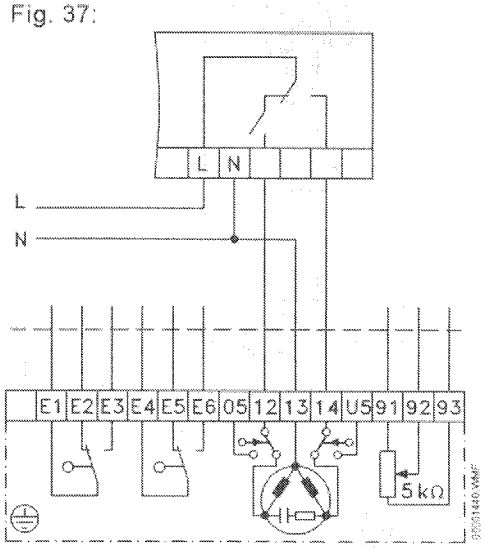

baelz 373-E02-2EZ-...FG...Ω
baelz 373-E07-2EZ-...FG...Ω
baelz 373-E40-2EZ-...FG...Ω
baelz 373-E60-2EZ-...FG...Ω

MBA 340 ... 359-E ...

Fig. 38:

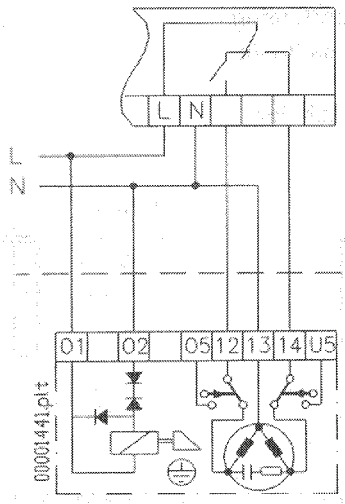

baelz 373 E11-...-

Fig. 39:

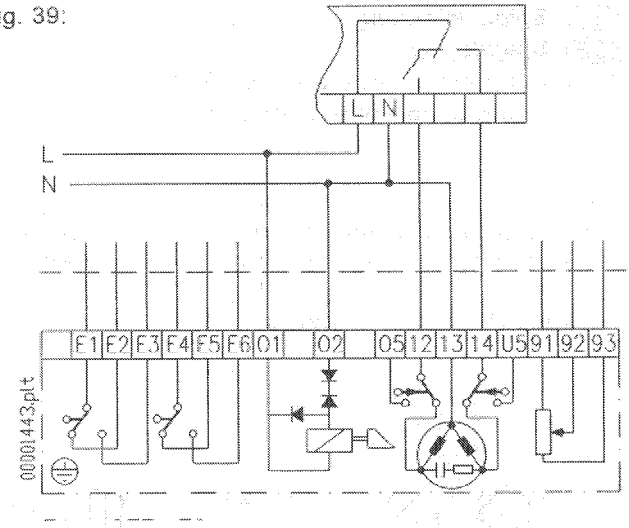

baelz 373 E11-...-2EZ-FG...Ω

Fig. 40:

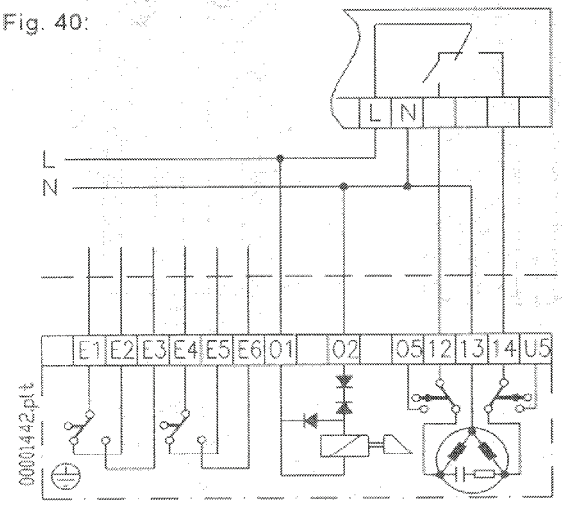

baelz 373 E11-...-2EZ

Achtung:
Der Sicherheitsantrieb baelz 373 E11 kann nur elektrisch betätigt werden.

Caution:
The baelz 373 E11 safety drive can be operated only electrically.

Attention :
Le servomoteur à retour à zéro baelz 373 E11 ne peut être actionné qu'électriquement.

Attenzione
L'attuatore con chiusura démergenza 373 E11 può essere comandato solo elettricamente.

Attentie:
De veiligheidsaandrijving baelz 373 E11 kan alleen elektrisch bediend worden.

Atenção!
O servo-motor de segurança baelz 373 E11 poderá ser acionado somente eletricamente.

Atención:
El accionamiento de seguridad balez 373 E11 puede ser accionado sólo eléctricamente.

Obs:
Säkerhetsdriften baelz 373 E11 kan endast aktiveras elektriskt.

MBA 340 ... 359-E ...

(D) Spindeldichtung
(GB) Spindle seal
(F) Garniture de presse étoupe de la tige
(I) Guarnizione dell'asta otturatore
(NL) Spindel-afdichting
(P) Vedação da haste
(E) Junta de husillo
(S) Spindelpackning

Fig. 41:

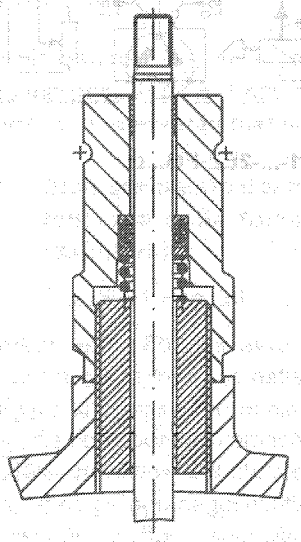

KLN 340-64
00001418.plt

DN 15-125
baelz 340...347-B-...

Fig. 42:

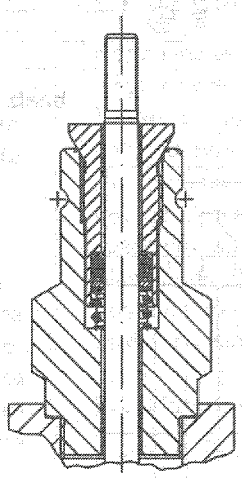

KLN 356-26
00001419.plt

DN 15-125
baelz 356...359-...

Fig. 43:

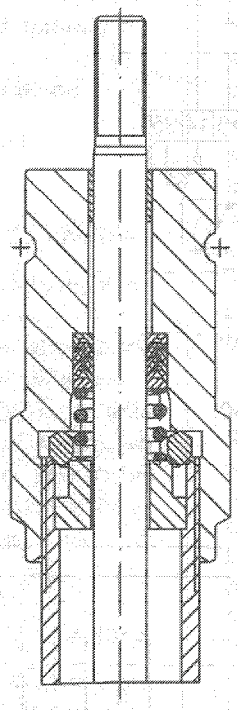

KLN 340-65
00001420.plt

DN 15-125
baelz...-BK -

Fig. 44:

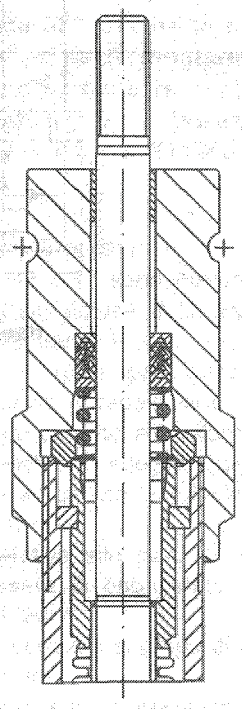

KLN 340-66
00001421.plt

DN 15-125
baelz...BK-SS

Fig. 45:

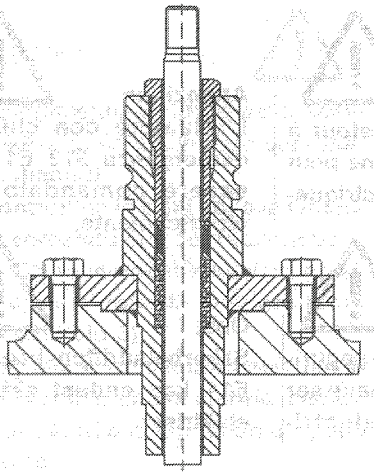

DN 150-300
baelz...-BB

Fig. 46:

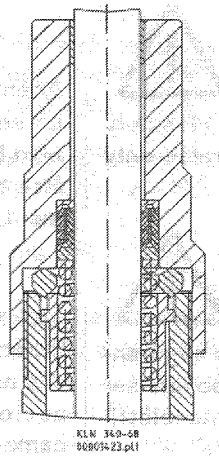

KLN 340-68
00001423.plt

DN 150-300
baelz...-BBK-

Fig. 47:

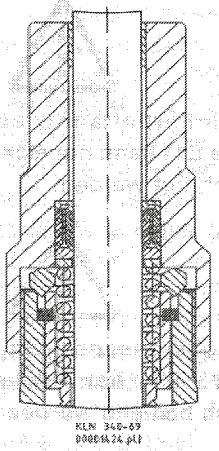

KLN 340-69
00001424.plt

DN 150-300
baelz...-BBK-SS-

MBA 340 ... 359-E ...

(D) Wechsel der Spindeldichtung - Spindel ∅ 10 mm - Standard DN 15...125
(GB) Changing the spindle seal - Spindle ∅ 10 mm - Standard DN 15...125
(F) Remplacement des garnitures de presse étoupe de la tige - Tige ∅ 10 mm - stand. DN 15...125
(I) Sostituzione della guarnizione dell' astaotturatore - aste ∅ 10 mm - stand. DN 15...125
(NL) Vervangen van de spindel-afdichting - spindel ∅ 10 mm - stand. DN 15...125
(P) Troca da vedação haste - haste ∅ 10 mm - stand. DN 15...125
(E) Cambio de la junta del husillo - husillo ∅ 10 mm - stand. DN 15...125
(S) Byte av spindelpackning spindel ∅ 10 mm - DN 15...125

Fig. 48:

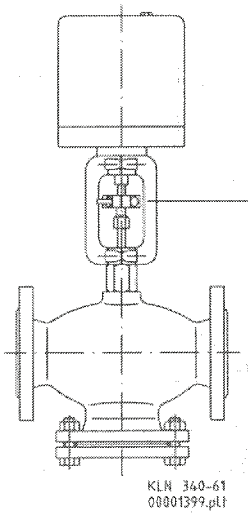

Fig. 49:

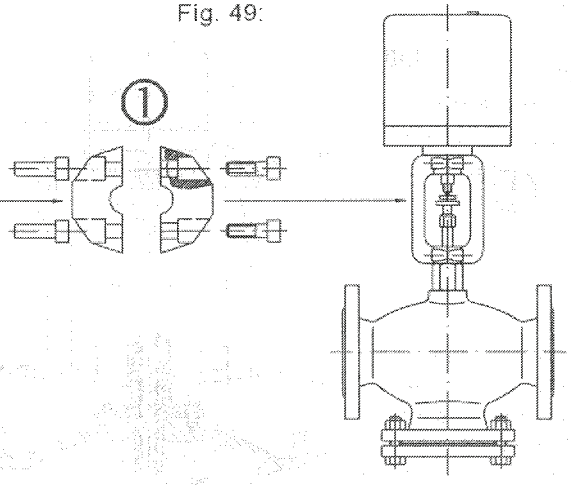

Fig. 50:

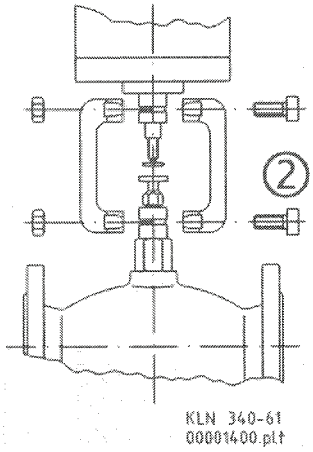

Fig. 51:

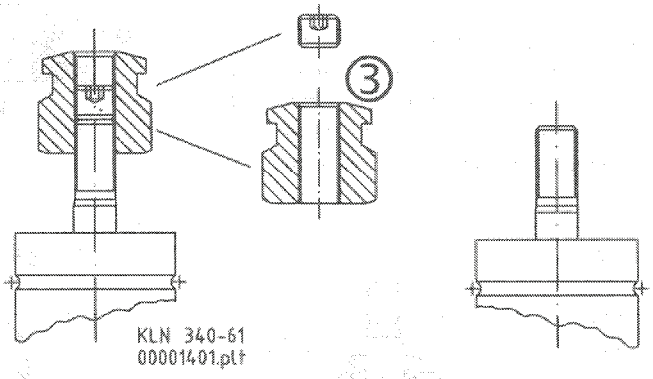

Fig. 52:

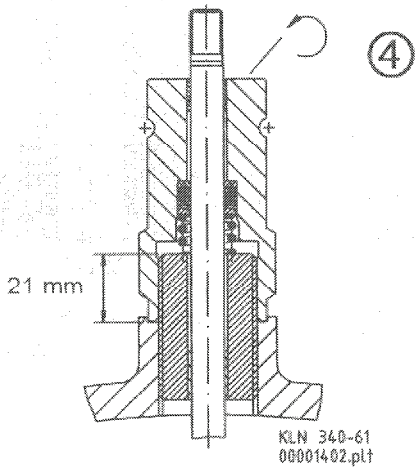

Fig. 53:

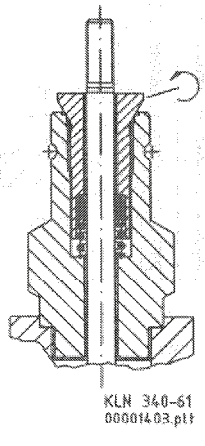

MBA 340 ... 359-E ...

(D) Wechsel der Spindeldichtung - Spindel ∅ 22 mm - Standard DN 150...300
(GB) Changing the spindle seal - Spindle ∅ 22 mm - Standard DN 150...300
(F) Remplacement des garnitures de presse étoupe de la tige - tige ∅ 22 mm - stand. DN 150...300
(I) Sostituzione della guarnizione dell' asta otturatore aste ∅ 22 mm - stand. DN 150...300
(NL) Vervangen van de spindel-afdichting - spindel ∅ 22 mm - stand. DN 150...300
(P) Troca da vedação haste -haste ∅ 22 mm - stand. DN 150...300
(E) Cambio de la junta del husillo - husillo ∅ 22 mm - stand. DN 150...300
(S) Byte av spindelpackning spindel ∅ 22 mm - DN 150...300

Fig. 54:

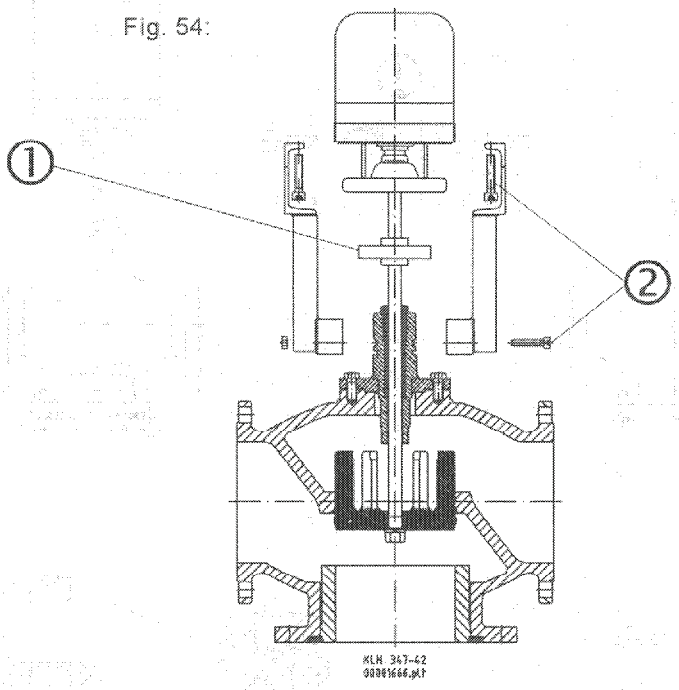

Fig. 55:

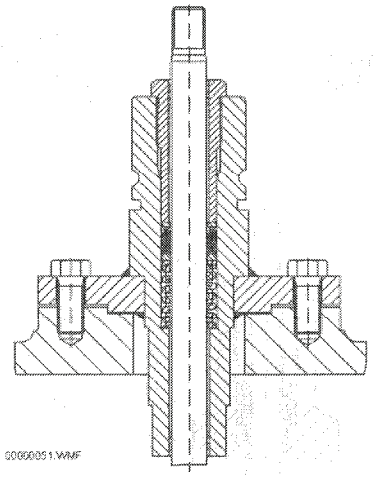

DN 150-300
baelz....-BB

Fig. 56:

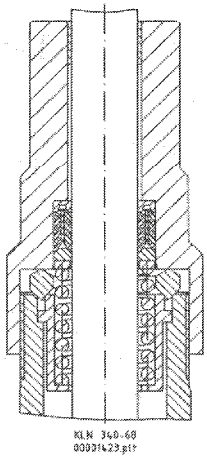

DN 150-300
baelz....-BBK-

Fig. 57:

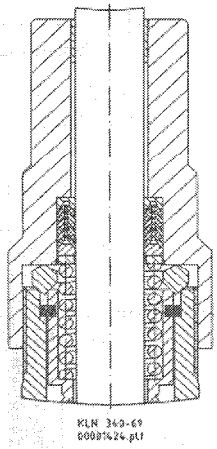

DN 150-300
baelz....-BBK-SS-

MBA 340 ... 359-E ...

(D) Spindeldichtung komplett
(GB) Sealing
(F) Presse-étoupe complet
(I) Set guarnizione completo
(NL) Set spindelafdichting
(P) Jogo de vedação completo
(E) Prensaestopa completo
(S) Packning kpl.

DN 15 - 125 ∅ 10 mm

Fig. 58:

Typ B

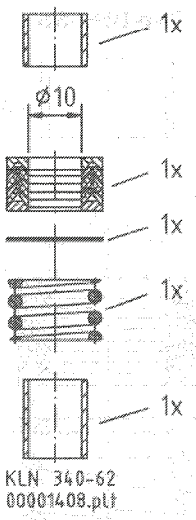

(D) Best. Nr.
(GB) Ord. Nr.
(F) N° de commande
(I) Nr. ord.
(NL) Bestel-nr.
(P) Pedido n°
(E) No. de ped.
(S) No. Best.

91030-001

Fig. 59:

Typ BK

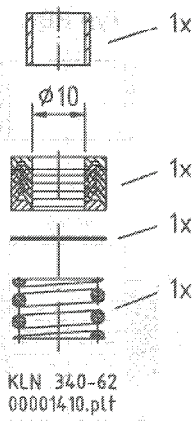

(D) Best. Nr.
(GB) Ord. Nr.
(F) N° de commande
(I) Nr. ord.
(NL) Bestel-nr.
(P) Pedido n°
(E) No. de ped.
(S) No. Best.

91030-001

Fig. 60:

Typ BK-SS

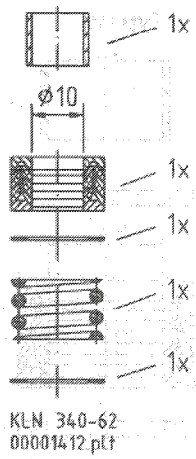

(D) Best. Nr.
(GB) Ord. Nr.
(F) N° de commande
(I) Nr. ord.
(NL) Bestel-nr.
(P) Pedido n°
(E) No. de ped.
(S) No. Best.

91030-001

MBA 340 ... 359-E ...

(D) Spindeldichtung komplett
(GB) Sealing
(F) Presse-étoupe complet
(I) Set guarnizione completo
(NL) Set spindelafdichting
(P) Jogo de vedação completo
(E) Prensaestopa completo
(S) Packning kpl.

DN 150 - 300 ∅ 22 mm

Fig. 61:

Typ BB

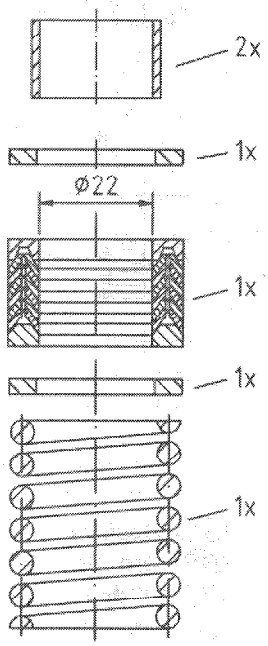

(D) Best. Nr.
(GB) Ord. Nr.
(F) N° de commande
(I) Nr. ord.
(NL) Bestel-nr.
(P) Pedido n°
(E) No. de ped.
(S) No. Best.

91030-101

Fig. 62:

Typ BBK

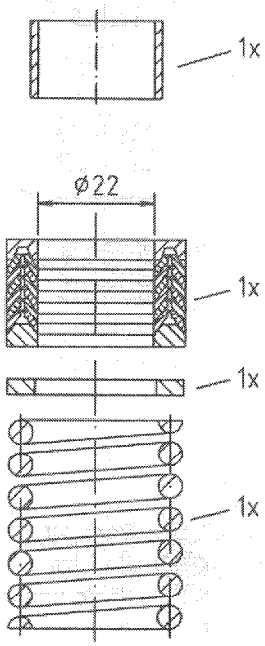

(D) Best. Nr.
(GB) Ord. Nr.
(F) N° de commande
(I) Nr. ord.
(NL) Bestel-nr.
(P) Pedido n°
(E) No. de ped.
(S) No. Best.

91030-102

Fig. 63:

Typ BBK-SS

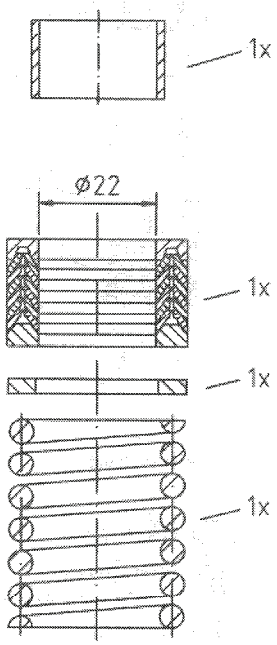

(D) Best. Nr.
(GB) Ord. Nr.
(F) N° de commande
(I) Nr. ord.
(NL) Bestel-nr.
(P) Pedido n°
(E) No. de ped.
(S) No. Best.

91030-103